LMB162G 16 characters x 2 lines

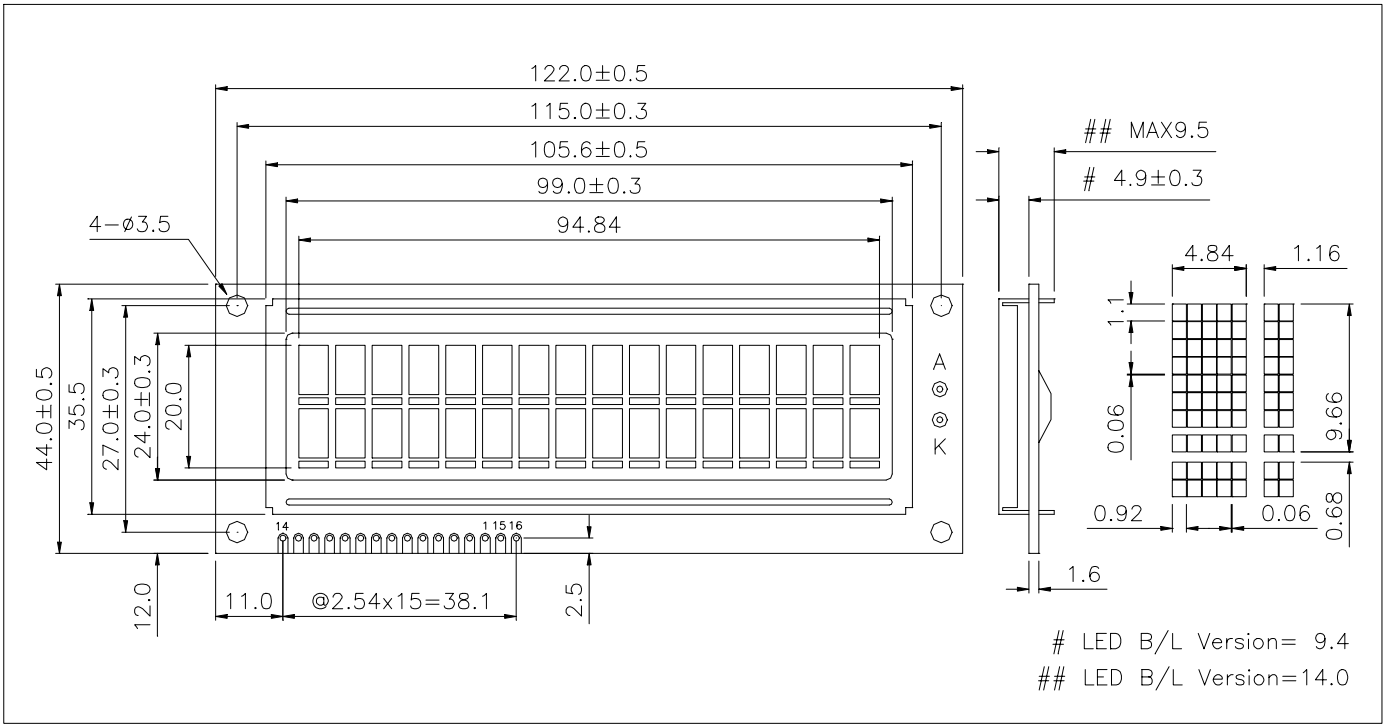

ABSOLUTE MAXIMUM RATINGS

Item	Symbol	Min.	Max.	Unit
Supply Voltage(Logic)	V_{DD} - V_{SS}	-0.3	7.0	V
Supply Voltage(LCD)	V_{DD} - V_O	-0.3	13.0	V
Input Voltage	V_I	-0.3	V_{DD} + 0.3	V
Operating Temp.	T_{opr}	-0	50	˚C
Storage Temp.	T_{stg}	-10	60	˚C

MECHANICAL DATA

Item	Nominal Dimensions	Unit
Module Size(W x H x T)	122.0 x 44.0 x 9.5	mm
Viewing Area(W x H)	99.0 x 24.0	mm
Character Size(W x H)	4.84 x 9.66	mm
Dot Size(W x H)	0.92 x 1.1	mm
Weight		g

ELECTRICAL CHARACTERISTICS (V_{DD}=5V±0.25V)

Item	Symbol	Test Condition	Min.	Typ.	Max.	Unit
Input High Voltage	V_{IH}	--	2.2	--	V_{DD}	V
Input Low Voltage	V_{IL}	--	- 0.3	--	0.6	V
Output High Voltage	V_{OH}	I_{OH} = - 0.2mA	2.4	--	V_{DD}	V
Output Low Voltage	V_{OL}	I_{OL} = 1.2mA	0	--	0.4	V
Supply Current	I_{DD}	V_{DD} = 5.0V	--	1.5	3.0	mA
LCD Driving Voltage	V_{DD} - V_O	Ta=25˚C	--	4.6	--	V

PIN CONNECTIONS

Pin	Symbol	Level	Function
1	V_{SS}	--	GND (0V)
2	V_{DD}	--	Supply Voltage for Logic(+5V)
3	V_O	--	LCD Driving Voltage
4	RS	H/L	H : Data L : Instruction Code
5	R/W	H/L	H : Read L : Write
6	E	H,H→L	Enable Signal
7	DB0	H/L	Data Bus Line
8	DB1	H/L	
9	DB2	H/L	
10	DB3	H/L	
11	DB4	H/L	
12	DB5	H/L	
13	DB6	H/L	
14	DB7	H/L	
15	LEDA	--	LED Backlight Power Supply
16	LEDK	--	

BLOCK DIAGRAM

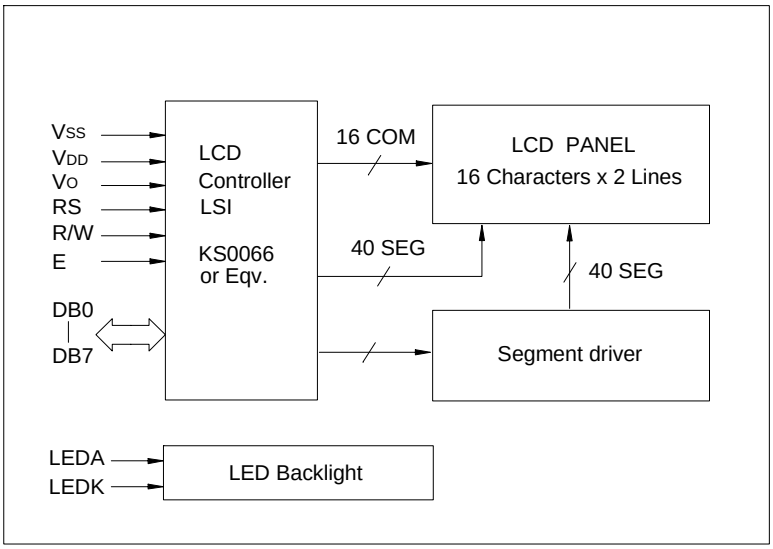

LED BACKLIGHT SPECIFICATIONS (Ta=25˚C)

Item	Symbol	Typ.	Max.	Unit
Forward Voltage	V_f	4.05	4.25	V
Forward Current	I_f	240	--	mA
Emission Wave Length	λ_p	568	--	nm